2. Materials and Methods

The MSN was 3D printed using plastic material of high clarity and resolution via Stereolithography (3DSystems, Rock Hill, SC, USA), which provided high precision and accuracy, with a tolerance of less than 0.05 mm. The printing was produced by a 3D model constructed in Solidworks (Dassault Systemes). A transparent, polycarbonate-like, plastic material was selected (Accura ClearVue; 3DSystems, Rock Hill, SC, USA), for detailed and smooth surface finish. We have designed and tested a reference one-stage focusing nozzle (OSN) that had the same axial length, inlet, and outlet diameters, and was used for comparing the performance of the multi-stage nozzle. The OSN was fabricated through the PolyJet™ 3D printing process (Stratasys Objet Eden 260 VS; Stratasys, Eden Prairie, MN, USA), providing an accuracy in the range of 25 to 80 μm, in a transparent, photopolymer material (VeroClear™ RGD810™; Stratasys, Eden Prairie, MN, USA) for enhanced surface smoothness.

Several collection surface designs with varying geometry were tested numerically. Curvy impaction substrates were previously found to improve collection efficiency, decreasing significantly the cut-off size of the collection efficiency curve. However, narrow distribution of finer particles collected could not be attained employing this design numerically. For the current study, a flat plate was used as a collection substrate, where the particles are impinged on. The collection plate was made of tungsten and had a width of 1.56 mm and a length of 6 mm. The optimized distance between the jet and the collection plate selected, was 1.5 mm.

The experimental set up used for the MSN characterization is presented in Figure 1. Liquid solutions of ammonium sulfate were aerosolized by a medical nebulizer (Salter 8900 Series

Disposable Small Volume Jet Nebulizer; Salter Labs, Arvin, CA, USA). The generated aerosol stream was dried by a diffusion dryer and then the polydisperse aerosol sample passed through the Aerodynamic Aerosol Classifier (AAC; Cambustion Ltd, Cambridge, United Kingdom) which produced monodisperse aerosol streams. Excess of air flow was removed by a vacuum pump. The air flow rate through the AAC was controlled at approximately 0.4 L min^{-1}. A humidifier was located prior to the impactor encompassing the focusing nozzle (MH-110-12F-4; Perma Pure LLC, NJ, USA) for eliminating particle bouncing on the collection surface. An Ultrafine Condensation Particle Counter (model UCPC 3776, TSI Inc., Shoreview, MN, USA) was employed for calculating the wall losses at the interior of the focusing nozzle and the collection efficiency of the impaction-based micro-concentrator.

The wall losses in the interior of the nozzle were measured as shown in Figure 1(a). The fraction of the number of particles trapped in the nozzle was estimated using the following equation:

$$\eta_{loss} = \frac{N_{in} - N_{out}}{N_{in}} \tag{1}$$

where η_{loss} denotes the losses, N_{in} (cm^{-3}) is the number concentration of particles measured upstream of the nozzle and N_{out} (cm^{-3}) is the number concentration of particles measured downstream of the nozzle.

The collection efficiency curves for the MSN and the OSN were experimentally measured using an impactor encompassing the focusing nozzle and a collection plate located 1.5 mm away from the nozzle jet (Figure 1(b)). The collection efficiency (η_c) was calculated as follows:

$$\eta_c = \frac{N_{w/o\ imp} - N_{w/\ imp}}{N_{w/o\ imp}} \quad (2)$$

where $N_{w/o\ imp}$ (cm^{-3}) is the number concentration of particles measured at the absence of the collection plate and $N_{w/\ imp}$ (cm^{-3}) is the number concentration of particles counted when the collection plate was located downstream the nozzle jet.

The flow was regulated downstream of the nozzle or the impactor by the pump contained in the UCPC at approximately 1.5 L min^{-1}, along with an additional vacuum pump which was used for maintaining the air flow rate at the nozzle/impactor inlet at approximately 2 L min^{-1}.

The particulate sample accumulated on the collection flat plate, i.e. the 'spot sample', was analysed using Raman Spectroscopy. During the sample collection the UCPC was connected at the inlet of the impactor, monitoring the number of particles entering the focusing nozzle, while a pump regulated the flow through the impactor at 2 L min^{-1}. The nominal analyte mass, based on the inlet aerosol concentration upstream of the impactor, was then calculated:

$$m_p = Q\ t_c\ N_{in}\ \rho_p\ V_p \quad (3)$$

where Q is the sample flowrate (L min^{-1}), t_c is the sample collection time (min), N_{in} is the measured particle number concentration upstream of the nozzle (cm^{-3}), ρ_p is the density of ammonium sulfate (1.77 g cm^{-3}) and V_p is the volume of the particles, assuming spherical shape. Ammonium sulfate particles of different aerodynamic diameters (d_p= 1000, 1500, 2000 and 2500 nm) were concentrated on the collection substrate and different calibration curves for each particle diameter were extracted. A portable Raman spectrometer was used for the analysis (i-

Raman®; B&W Tek, Newark, DE, USA). The excitation wavelength used in the spectrometer was 785 nm, with 420 mW of power. The working distance was approximately 9 mm, and the diameter of the laser beam was approximately 105 µm. The integration time selected for the spectra acquisition was 30 seconds. For the ammonium sulfate particles used for the characterization, the peak signal intensity is observed at a Raman shift of approximately 977 cm^{-1}. Three replicates were obtained for each measurement by acquiring spectra from three different spots of the deposited sample. The average areas of the peaks were estimated for the extraction of calibration curves providing the association between the Raman signal intensity and the particulate mass accumulated on the collection plate.

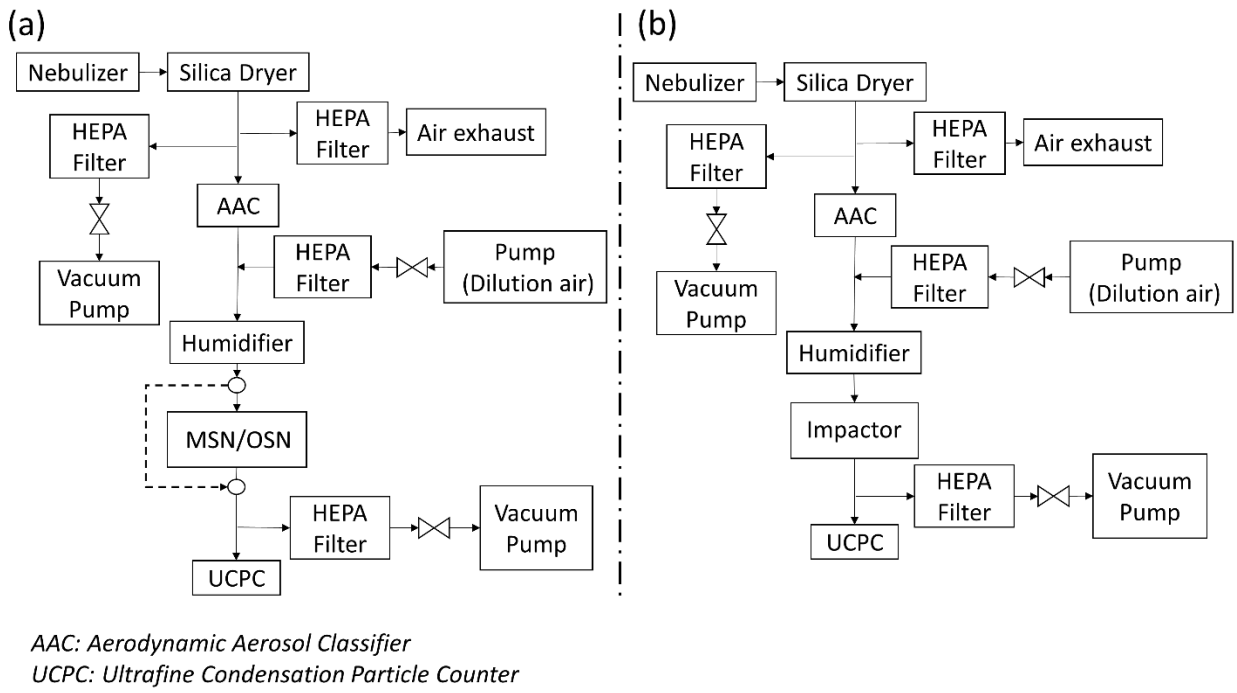

Figure 1. Experimental set up used for (a) the measurement of the wall losses in the interior of the focusing nozzles and (b) the measurement of the collection efficiency curves.